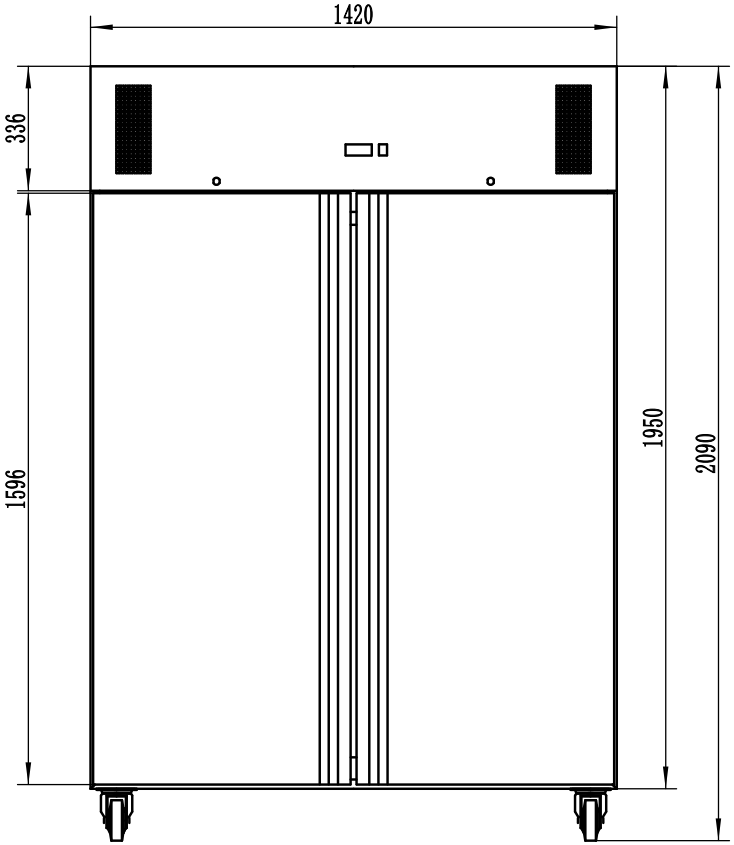


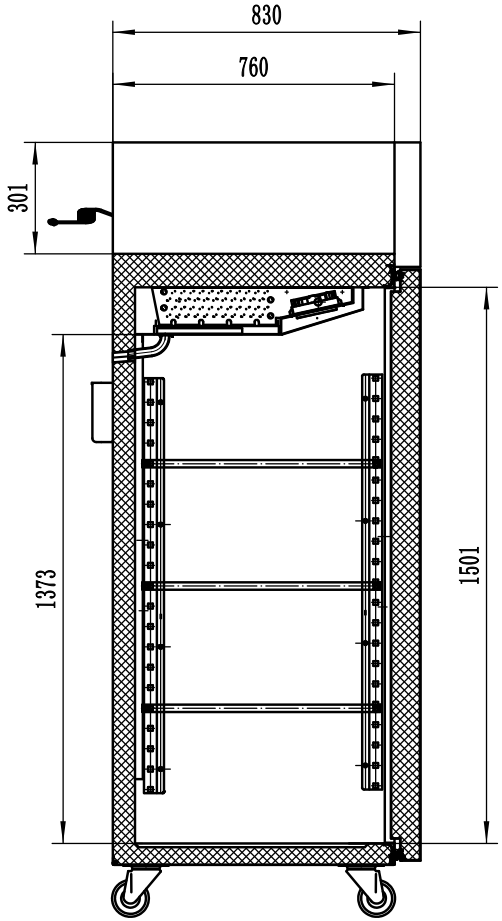


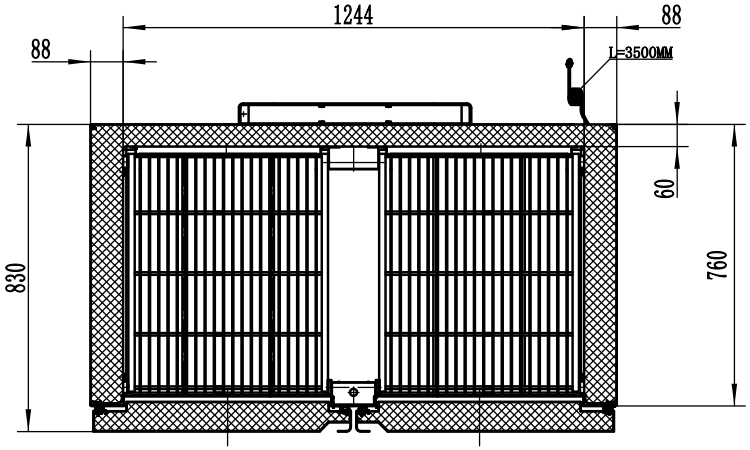


| | |
|---|---|
| Drawn by: | SKU Code(s) UA052 |
| Date:25/02/2024 | |
| Sheet:1 | |
| Drawing Title<br>·Polar U-Series Double Door Upright Fridge | |
| Status Revision | Rev. 1 |