02/2021

Mod: TR8-SH/R6

Production code: 19067109

Diamond

VITRINAS REFRIGERADAS HC / REFRIGERATED SHOWCASES HC

TR6-TP/R6 19067106

TR8-TP/R6 19067107

Version 00-2019

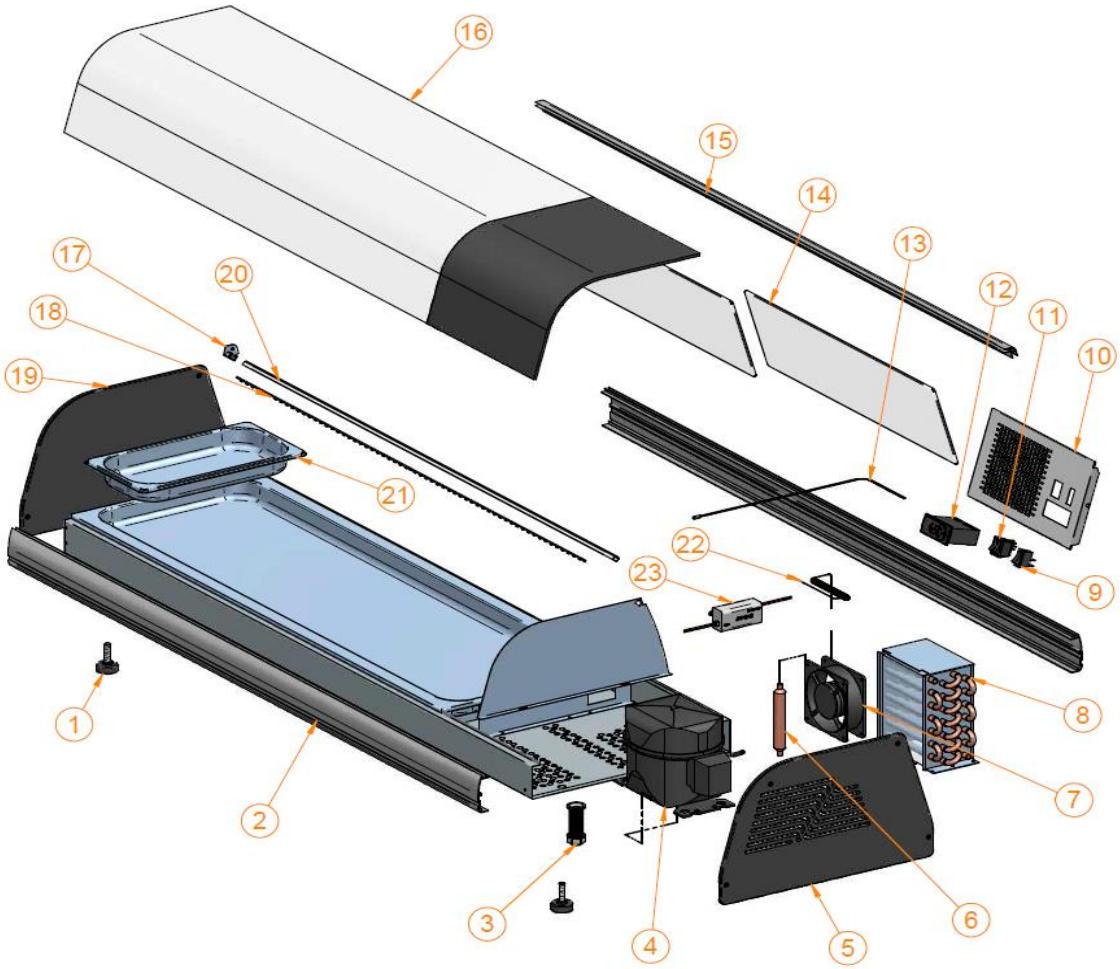

Nº	CODE CÓDIGO	RECOM.	DESCRIPTION	DESCRIPCIÓN	TR6-TP/R6	TR8-TP/R6	0	0	0	0
1	12037636		LEVELING FOOT	PIE NIVELADOR	4	4				
2	12078698		FRONT PROFILE	PERFIL FRONTAL	2					
	12033823					2				
3	12061086		DRAIN	DESAGÜE	1	1				
4	12140771		COMPRESSOR	COMPRESOR	1	1				
5	12068435		RIGHT SIDE	COSTADO DERECHO	1	1				
6	12116080		FILTER	FILTRO DESHIDRATADOR	1	1				
7	12067528		CONDENSER FAN	VENTILADOR CONDENS.	1	1				
8	12212219		CONDENSER	CONDENSADOR	1	1				
9	12058759		SWITCH LIGHT	INTERRUPTOR LUZ	1	1				
10	12079022		CONTROL PANEL GRID	CUADRO MANDOS	1	1				
11	12049461		GENERAL SWITCH	INTERRUPTOR GENERAL	1	1				
12	12047691		THERMOSTAT	TERMOSTATO	1	1				
13	12045530		THERMOSTAT PROBE	SONDA TERMOSTATO	1	1				
14	12035280		DOOR	PUERTA	2					
	12045065					2				
15	12078706		TOP PROFILE	PERFIL SUPERIOR	1					
	12050632					1				
16	12130436		CURVED CRISTAL	CRISTAL CURVO	1					
	12130438					1				
17	12135621		LED PROFILE SUPPORT	SOPORTE PERFIL LED	1	1				
18	12120087		LED STRIP	TIRA LED	1					
	12120088					1				
19	12046757		LEFT SIDE	COSTADO IZQUIERDO	1	1				
20	12165532		LED PROFILE	PERFIL LED	1					
	12165533					1				
21	12035276		GN TRAY	CUBETA GN	6	8				
22	12060164		CAPILLARY TUBE	TUBO CAPILAR	1	1				
	12060130									
23	12101518		LED POWER SUPPLY	FUENTE LED	1	1				
24	12078830		EVAPORATOR COVER	TAPA EVAPORADOR						
	12078831									
25	12068181		EVAPORATOR	EVAPORADOR						
	12068182									
26	12078901		EVAPORATOR TRAY	BANDEJA EVAPORADOR						
	12078904									
27	12078905		PERFORATED TRAY	FONDO PERFORADO						
	12078906									
28										
29										
30										
31										
32										
33										
34										
35										
36										
37										

VITRINAS REFRIGERADAS HC / REFRIGERATED SHOWCASES HC

TR6-SH/R6	19067108
TR8-SH/R6	19067109

Version 00-2019

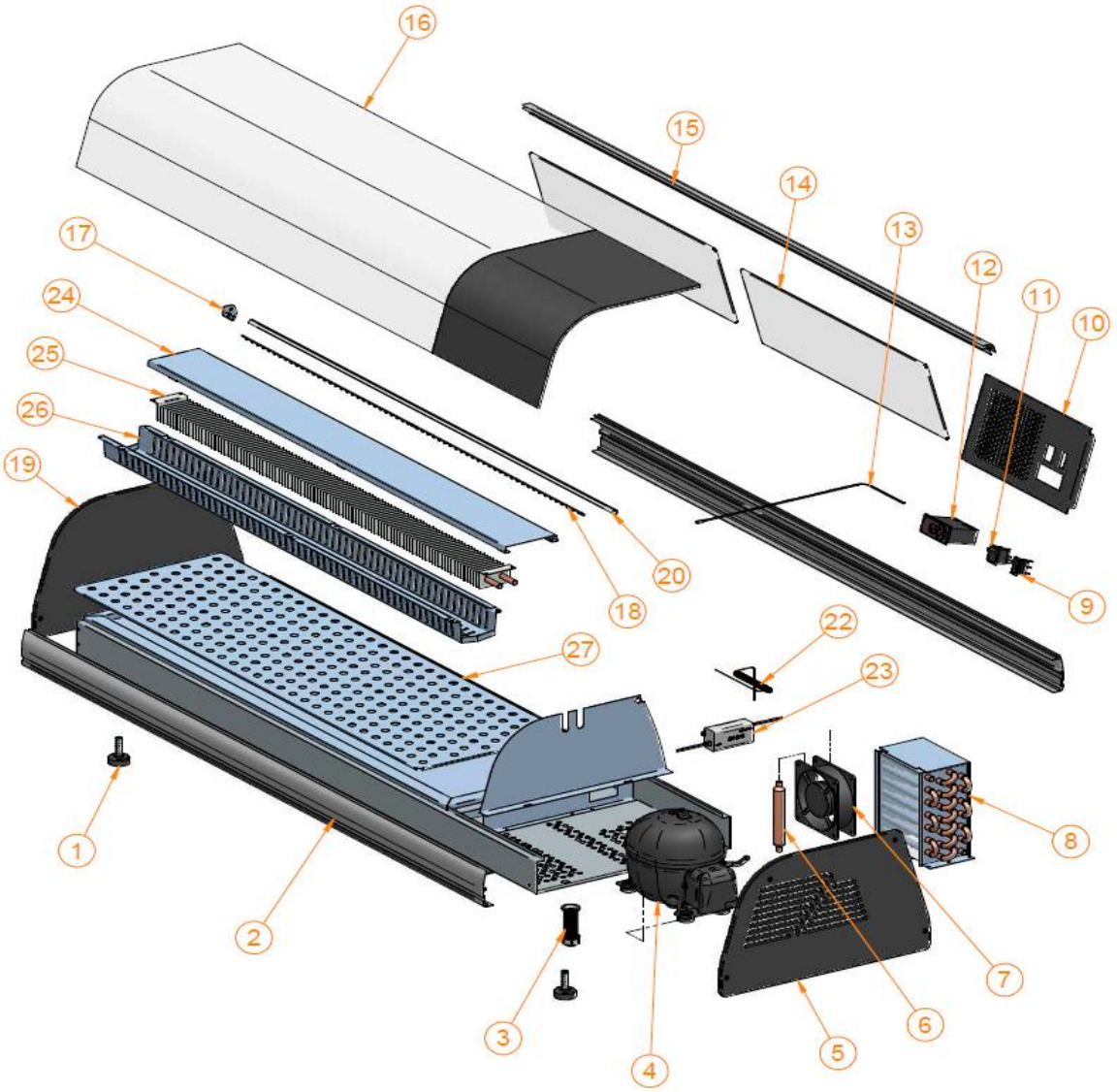

Nº	CODE CÓDIGO	RECOM.	DESCRIPTION	DESCRIPCIÓN	TR6-SH/R6	TR8-SH/R6	0	0	0	0
1	12037636		LEVELING FOOT	PIE NIVELADOR	4	4				
2	12078698		FRONT PROFILE	PERFIL FRONTAL	2					
	12033823					2				
3	12061086		DRAIN	DESAGÜE	1	1				
4	12140771		COMPRESSOR	COMPRESOR	1	1				
5	12068435		RIGHT SIDE	COSTADO DERECHO	1	1				
6	12116080		FILTER	FILTRO DESHIDRATADOR	1	1				
7	12067528		CONDENSER FAN	VENTILADOR CONDENS.	1	1				
8	12212219		CONDENSER	CONDENSADOR	1	1				
9	12058759		SWITCH LIGHT	INTERRUPTOR LUZ	1	1				
10	12079022		CONTROL PANEL GRID	CUADRO MANDOS	1	1				
11	12049461		GENERAL SWITCH	INTERRUPTOR GENERAL	1	1				
12	12047691		THERMOSTAT	TERMOSTATO	1	1				
13	12045530		THERMOSTAT PROBE	SONDA TERMOSTATO	1	1				
14	12035280		DOOR	PUERTA	2					
	12045065					2				
15	12078706		TOP PROFILE	PERFIL SUPERIOR	1					
	12050632					1				
16	12130436		CURVED CRISTAL	CRISTAL CURVO	1					
	12130438					1				
17	12135621		LED PROFILE SUPPORT	SOPORTE PERFIL LED	1	1				
18	12120087		LED STRIP	TIRA LED	1					
	12120088					1				
19	12046757		LEFT SIDE	COSTADO IZQUIERDO	1	1				
20	12165532		LED PROFILE	PERFIL LED	1					
	12165533					1				
21	12035276		GN TRAY	CUBETA GN						
22	12060164		CAPILLARY TUBE	TUBO CAPILAR						
	12060130				1	1				
23	12101518		LED POWER SUPPLY	FUENTE LED	1	1				
24	12078830		EVAPORATOR COVER	TAPA EVAPORADOR	1					
	12078831					1				
25	12068181		EVAPORATOR	EVAPORADOR	1					
	12068182					1				
26	12078901		EVAPORATOR TRAY	BANDEJA EVAPORADOR	1					
	12078904					1				
27	12078905		PERFORATED TRAY	FONDO PERFORADO	1					
	12078906					1				
28										
29										
30										
31										
32										
33										
34										
35										
36										
37										