Drawing

	Batch #	Appliance part#
Hendi B.V. Steenoven 21 3911 TX Rhenen The Netherlands	400760 and up	149614
	Description	
	Green Fire with 4 burners	

Date	11-05-2015	**Revision #**	Revision version
Revision	First bill of materials (BOM)		

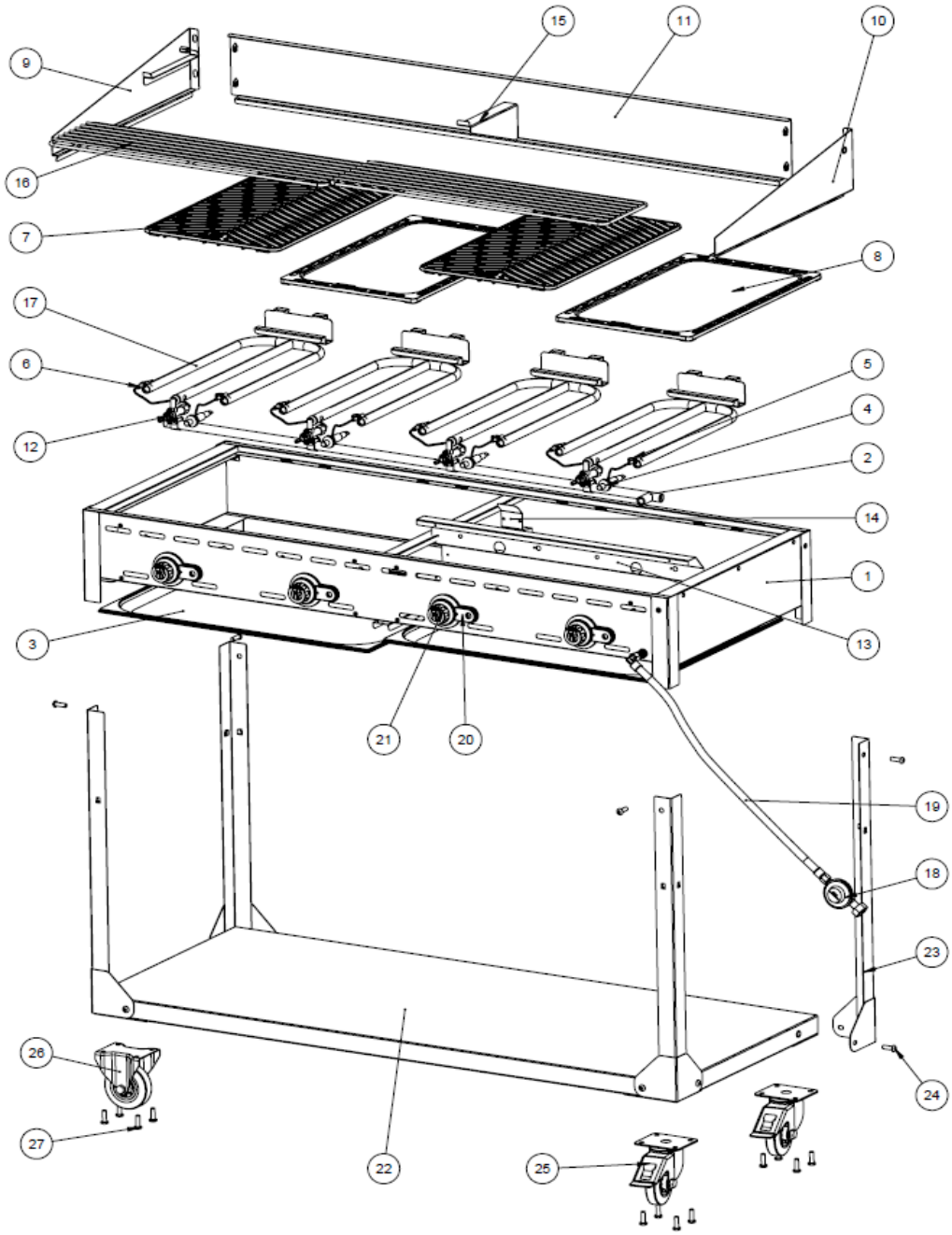

Bill of materials (BOM)

Hendi B.V.
Steenoven 21
3911 TX Rhenen
The Netherlands

Batch #	Appliance part#
400760 and up	149614
Description	
Green Fire with 4 burners	

Date	11-05-2015	**Revision #**	Revision version
Revision	First bill of materials (BOM)		

Item	Description	Part#	Quantity	Remark	Picture
1	Frame	n/a	1		
2	Inlet pipe	n/a	1		
3	Grease tray	806005	2		
4	Piezo igniter	153178	4		
5	Electrode with wiring 190mm	932087	4		
6	Thermocouple	152195	4	Incl. 2 pcs M8x1	
7	Cast iron grid	932018	2		
8	Cast iron griddle	932001	2		
9	Windscreen (left side)	932049	1		
10	Windscreen (right side)	932056	1		
11	Windscreen (back side)	933947	1		
12	Gas valve	932100	4		
13	Heat shield	n/a	1		
14	Bracket	n/a	1		
15	Grid support	933954	1		
16	Grid	932025	2		
17	Gas burner (green fire)	932070	4		
18a	Regulator 50mBar	152157	1		
18b	Regulator 37mBar	152188	1		
18c	Regulator 37mBar UK	153161	1	*Note Only for the United Kingdom	
19	Hose assembly	932094	1	(incl. quick connect coupling)	
20	Base plate	nss	1	Available in 932117	
21	Knob complete	932117	1	Incl. item 20	
22	Lower shelf	933961	1		
23	Leg	933978	4		
24	Socket-head screw M8x25	n/a	12		
25	Swivelling wheel with brake	933985	2		
26	Wheel	933992	2		
27	Bolt M8x25	n/a	16		

n/a -> not available **nss -> not sold separately**